Kokyo
株式会社 光響
Email : info@symphotony.com
Web : https://www.symphotony.com/

LIGHTWAVE LINK INC.
THE FUTURE IS HERE
LIGHTWAVE LINK INC
www.lightwavelink.com.tw

4X4 DUAL PORT SX OPTICAL BYPASS MODULE

Product Description

LLI's Dual Port Gigabit Ethernet Fiber Bypass Module is a compact module that contains two Gigabit Ethernet ports and can integrated with LAN ports controllers to be a Network Interface Card (NIC). The LLI's Dual Port SX Fiber Bypass Module is targeted to inline network system that maintains network connectivity when power failure or system fails. LLI's Dual Port SX Fiber Bypass Module supports Normal and Bypass modes, and can be controlled to perform the Block mode. In Normal mode, the ports are independent interfaces. In Bypass mode, all packets received from one port are transmitted to the adjacent port. In Block mode, the module blocks the route. LLI's Dual Port SX Fiber Bypass Module can Bypass or Block its Ethernet ports on a host system failure, power off, or upon software request. LLI's Dual Port SX Fiber Bypass Module can be integrated with Intel 82571, 82575, or 82576 Controllers. The FiberBypass Module utilizes fiber-to-fiber technology over an angled surface to achieve ultra low losses and crosstalk. It is suitable for connecting with in-line equipments for power failure or system maintenance. When the In-Line unit is not on or is in bypass mode, the relays within the Fiber Bypass Module are set to bridge the optical signals directly through the switch, completely bypassing the In-Line equipment. If the In-Line equipment is on and operating normally, then it supplies power to the switch through a high speed connector PIN. Compact and competitive cost, this module provides excellent performance on your network. Lightwave Link 4x4 optical bypass box fully complies with RoHS Directive 2002/95/EC (2008/385/EC).

Features

- Reliable Passive Fiber Bypass (Latching or Non-latching)
- Compact Format and ROHS Compliant
- Low Return Loss
- Available in 62.5/125µm and 50/125µm multimode
- PCB Mountable Type
- Compliant with IEEE 802.3z Gigabit Ethernet standard
- Compliant with Fiber Channel Standard
- SFF LC Connector
- Class 1 Laser Product Complies with EN 60825-1
- Controlled by NIC's WDT and Controller to Perform
- Programmable Normal, Bypass, and Block Modes at
- Powerless, System Hangs, and Software Request.

Applications

- IPS interface card or external bypass unit
- UTM/ADM
- Optical transmission
- Industrial Ethernet ring switch under power failure or system hang
- Node Bypass Protection

Program Information

4x4 OSW	Status Feedback	0: Bypass Mode 1: Normal Mode
	Normal/Bypass	0: Bypass 1: Normal
O/E_1/2	TDIS	0: Enable 1: Disable

Performance Specification

Parameter	50um or 62.5um Core Multi Mode			Unit
	Min.	Typ.	Max.	
Wavelength Range		850 / 1300		nm
Insertion Loss [1]		0.6	1.3	dB
Return Loss		0.8		dB
PDL				dB
WDL (850±50nm / 1300±50nm)			0.3	dB
Crosstalk			-80	dB
Repeatability			±0.1	dB
Switching Time			5	ms
Absolute Optical Input Power			500	mW
Relay Coil Resistance		Latching: 125±10% / Non-Latching: 178±10%		Ω
Operating Current		Latching: 40±10% / Non-Latching: 28±10%		mA
Operating Voltage	4.5	5.0	5.5	VDC
Power Consumption		Latching: 200±10% / Non-Latching: 140±10%		mW
Status Sensor Contact Resistance			50	mΩ
Switching Life Expectancy	$3*10^7$			Cycles
Operation Temperature	-20		70	℃
Storage Temperature	-40		85	℃
Operation Humidity	5		95	%RH
Storage Humidity	5		95	%RH
Dimension (H×W×L)		15×55×65		mm
Weight [2]		75		g

Function Diagram

Normal Mode

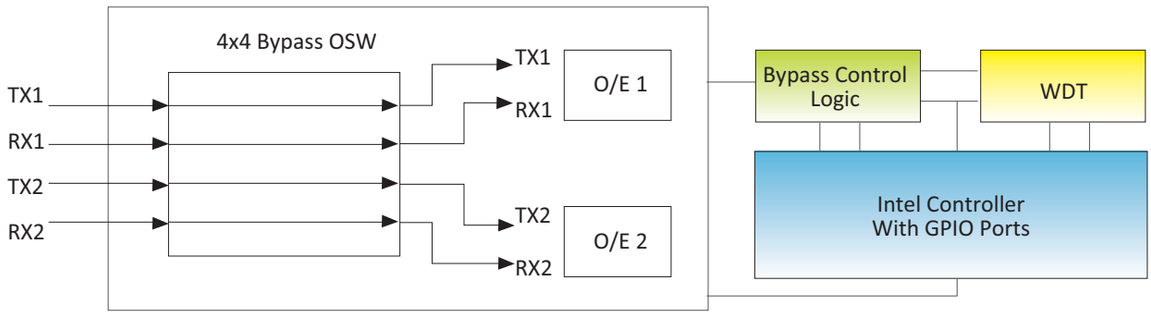

Bypass Mode

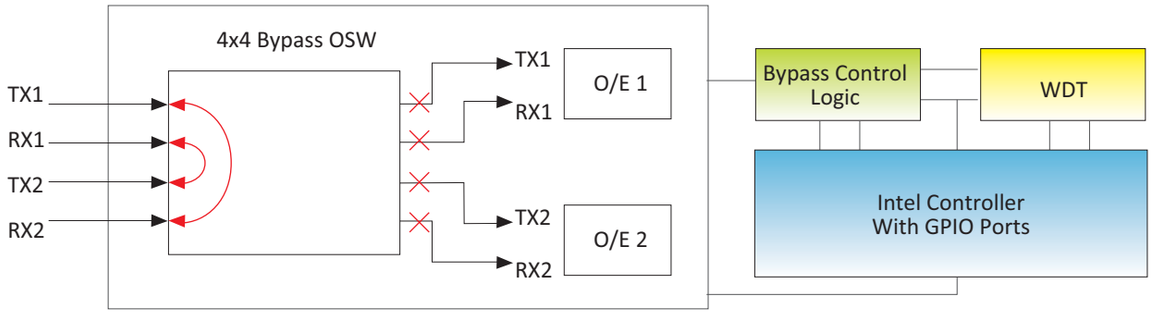

Multimode Transceiver Characteristics

Transmitter Specification (Vcc=3.1V~3.5V; Tc=0℃~70℃/Tc=-40℃~85℃)

Parameter	Symbol	Min	Typ	Max	Unit
Optical Characteristics					
Output Optical Power	P_{out}	-9	--	-3	dBm
Extinction Ratio	ER	9	--	--	dB
Center Wavelength	λ_c	1270	1310	1355	nm
Spectral Width (RMS)	σ	--	--	4	nm
Rise/Fall time (20-80%)	$T_{r,f}$	--	--	260	ps
Relative Intensity Noise	RIN	--	--	-120	dB/Hz
Output Eye		Compliant with IEEE 802.3z			
Max. P_{out} TX-DISABLE Asserted	Poff	--	--	-45	dBm
Electrical Characteristics					
Differential Input Voltage	V_{DIFF}	0.4	--	2.0	V
Tx_Disable_Input_High	V_{DISH}	2.0	--	Vcc+0.3	V
Tx_Disable_Input_Low	V_{DISL}	0	--	0.8	V
Tx_Fault_Output_High	V_{FH}	2.0	--	Vcc+0.3	V
Tx_Fault_Output_Low	V_{FL}	0	--	0.8	V

Receiver Specification (Vcc=3.1V~3.5V; Tc=0℃~70℃/Tc=-40℃~85℃)

Parameter	Symbol	Min	Typ	Max	Unit
Optical Characteristics					
Optical Input Power	P_{SATIN}	13	--	--	dBm
Receiver Sensitivity(PRBS=27-1;BER<=1012)	P_{SAN}	--	--	-21	dBm
Operating Center Wavelength	λ_c	1260		1610	nm
Optical Return Loss	ORL	12	--	--	dB
Loss of Signal-De-asserted	P_{LD}	--	--	-21	dBm
Loss of Signal-Asserted	P_{LA}	-45	--	--	dBm
Loss of Signal-Hysteresis	P_{LH}	0.5		6	dB
Electrical Characteristics					
Differential Input Voltage	V_{DIFF}	0.4	--	2.0	V
Receiver Loss of Signal Output Voltage-Low	V_{DISH}	0	--	0.8	V
Receiver Loss of Signal Output Voltage-High	V_{DISL}	2	--	Vcc+0.3	V

Ordering Information

FOBM □ - □ - □ - □ - □ - □ - □

Product Version	Ports	Application Wavelength	Operation Function	Fiber Type	Fiber cabling	Connector Type	
Blank: Original	D: Dual Ports	1: 850nm	L: Latching	50: 50/125um	B: Bare fiber	1: None	8: LC/PC
		2: 1300nm	N: Non-Latching	62: 62.5/125um	L: 900um loose Tube	2: FC/PC	9: SC/UPC
						3:FC/APC	A: MT/RJ
						4: SC/APC	B: MU/UPC
						5: SC/PC	C: FC/UPC
						6: MU/PC	D: LC/APC
						7: ST/PC	E: LC/UPC