RgBLase LLC

P/N: FB – 523 – XXX

Diode Pumped Solid State Laser Module

Key Features:

- **523nm output**
- **Constant Power Control**
- **Remote control**
- **TTL Modulation (optional)**
- **ESD protection**
- **Plug & Play**
- **Fiber Coupling**

Applications:

- **Bio Technology**
- **Photo Finishing**
- **Semiconductor Instrument**
- **Medical Instrument**
- **Scientific Research**

Specifications:

Wavelength	523.5nm +/-1nm
CW Output power	10mW ~ 100mW
Output stability	10% standard, 5% optional
Optical Noise (RMS)	10%
Transverse beam mode	Near TEM_{00}
Beam Divergence (1/e2,Full Angle)	<1.5 mrad
Beam Diameter (1/e2)	~2mm
M2	<1.2
Spectral Linewidth	~0.1nm
Polarization Ratio	100:1(0 or 90 degree)
Pointing Stability After Warm Up	<0.05mrad
Beam height from base	24.8mm
Operating temperature	10~35 degree C
Warm up time	< 15minutes
Expected lifetime	10,000hours
Mechanical Dimensions(laser head)	140.8mm(L)X73mm(W)X46.2mm(H)
Warranty	1 year from the date ship out from out factory

RGBLase LLC 3984 Washington Blvd. #306 Fremont CA 94538 USA Phone 001 510 962 5884 Fax 001 866 650 8989
WWW.RGBLASE.COM EMAIL: rgblasec@rgblase.com

RgBLase LLC

P/N: FB – 523 – XXX

Diode Pumped Solid State Laser Module

Mechanical Dimension of Laser Head:

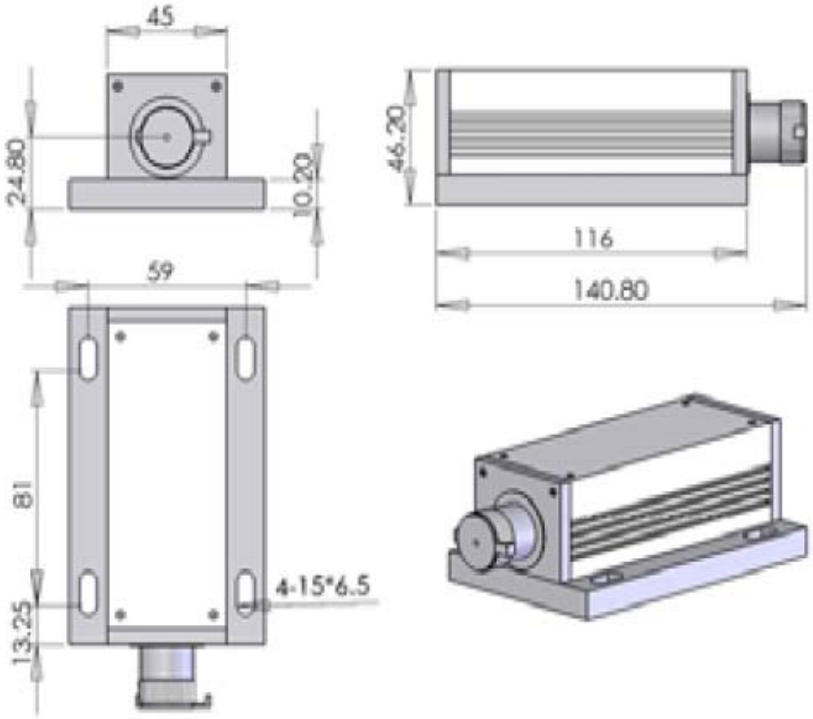

Mechanical Dimension of Laser Driver:

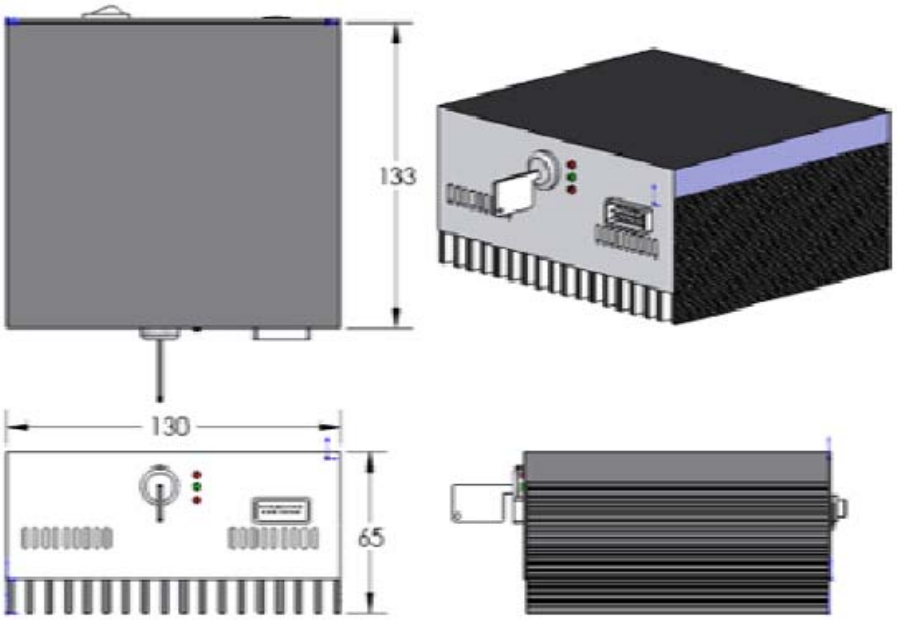

Kokyo 株式会社光響

住所：京都市下京区烏丸通四条下ル水銀屋町637番地第5長谷ビル2階

Email : info@symphotony.com TEL : 070-6582-2430