RgBLase LLC

P/N: QFB-355-xxx ***V1.0***

Diode Pumped Solid State Laser Module

Key Features:

- **355nm UV laser**
- **Stabilized Pulse Control**
- **High Rep. Rate**
- **High Peak Power**
- **ESD protection**
- **Plug & Play**

Applications:

- **Bio Technology**
- **Photo Finishing**
- **Semiconductor Instrument**
- **Medical Instrument**
- **Scientific Research**

Specifications:

Wavelength	355+/-1nm
Average Output power*	1mW ~ 1000mW
Output stability	10% standard, 5% optional
Single Pulse Energy	0.1 ~ 50uJ
Peak Power	Up to 600kW
Transverse beam mode	Near TEM_{00}
Rep. Rate	
For Average Power <100mW	Up to 5KHz with stabilized pulse
For Average Power 100mW ~ 1000mW	5 ~ 20KHz unstabilized pulse
Pulse Duration	
For Average Power <100mW	~7ns
For Average Power 100mW ~ 1000mW	~10ns
Beam Diameter (1/e2)	~2mm
Polarization Ratio	>100:1
Pointing Stability After Warm Up	<0.05mrad
Beam height from base	
< 30mW	45mm
50mW ~ 200mW	93.5mm

RGBLase LLC 3984 Washington Blvd. #306 Fremont CA 94538 USA Phone 001 510 962 5884 Fax 001 866 650 8989
WWW.RGBLASE.COM EMAIL: rgblasec@rgblase.com

RgBLase LLC

P/N: QFB-355-xxx *V1.0*

Diode Pumped Solid State Laser Module

Operating temperature	10~35 degree C (laser case)
Warm up time	< 15minutes
Expected lifetime	10,000hours
Mechanical Dimensions(laser head)	
< 100mW	211.3mm(L)X88mm(W)X74mm(H)
100m ~ 1000mW	333mm(L)X140mm(W)X125mm(H)
Warranty	1 year from the date ship out from out factory

*** Average Power(mW)=Single pulse energy(uJ) X Rep rate(KHz)**

Mechanical Dimension of Laser Head with power <100mW:

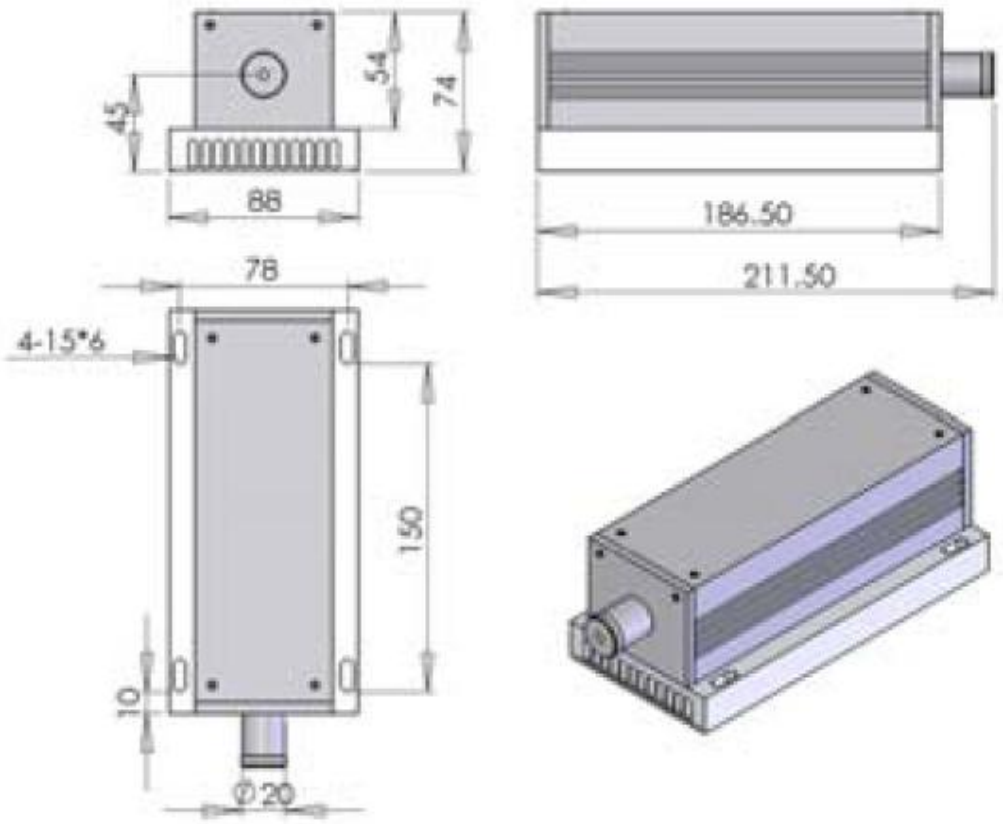

RGBLase LLC 3984 Washington Blvd. #306 Fremont CA 94538 USA Phone 001 510 962 5884 Fax 001 866 650 8989
WWW.RGBLASE.COM EMAIL: rgblasec@rgblase.com

Diode Pumped Solid State Laser Module

Mechanical Dimension of Laser Driver with power <100mW:

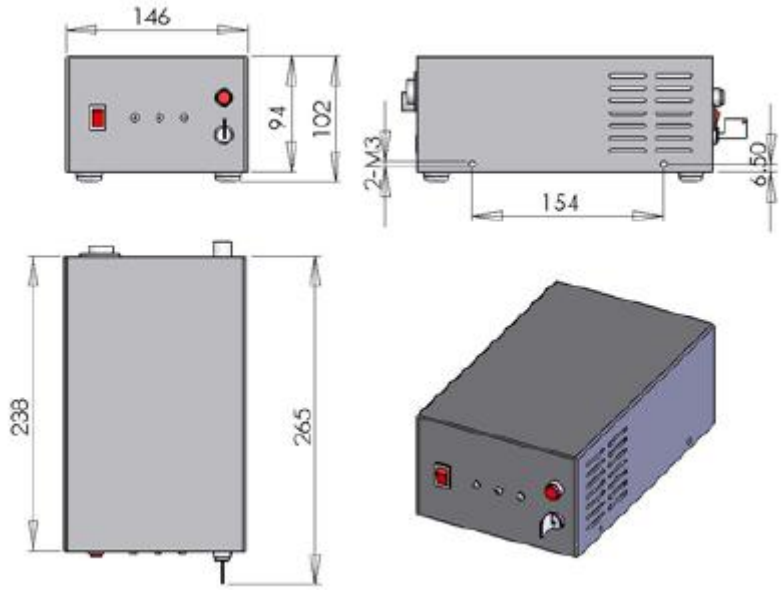

Mechanical Dimension of Laser Head with power 100mW ~ 1000mW:

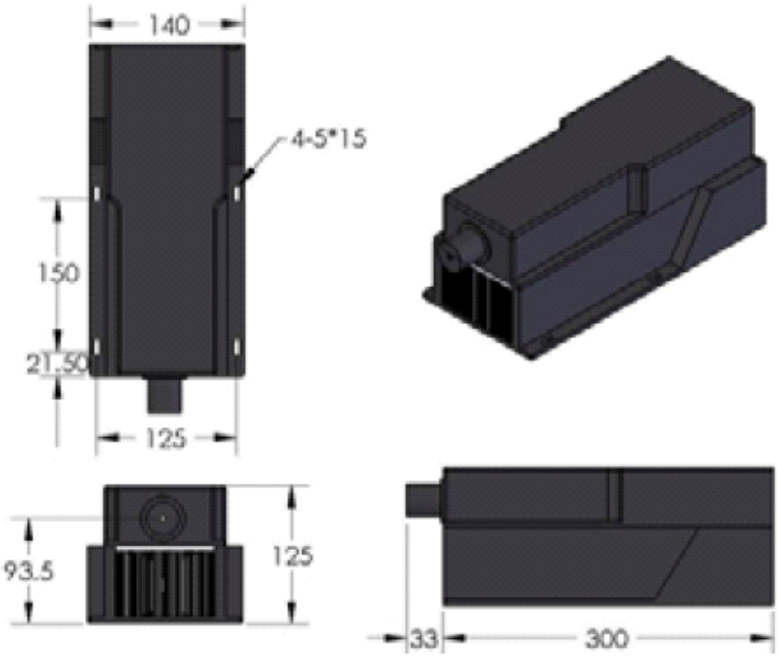

RgBLase LLC

P/N: QFB-355-xxx ***V1.0***

Diode Pumped Solid State Laser Module

Mechanical Dimension of Laser Driver with power 100mW~1000mW:

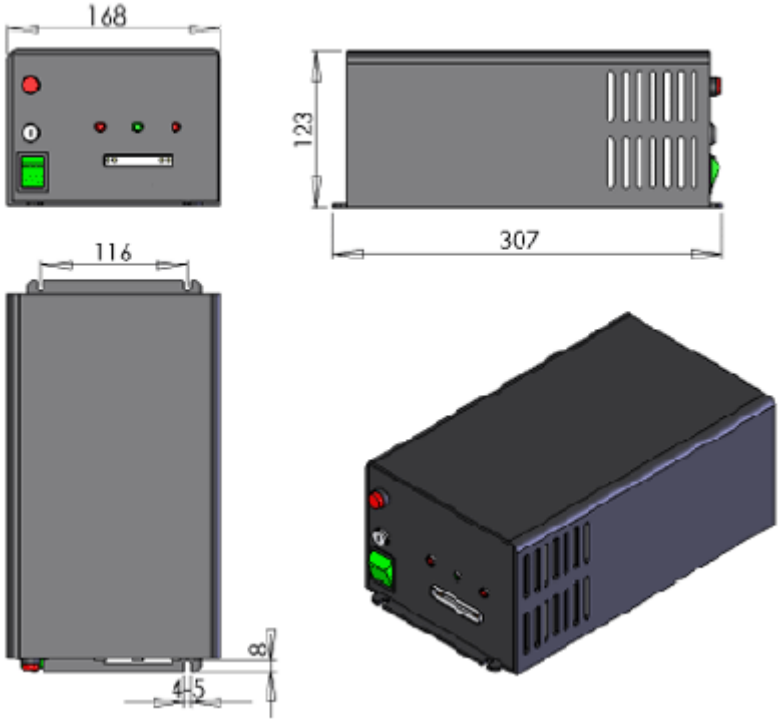

Kokyo 株式会社光響
住所：京都市下京区烏丸通四条下ル水銀屋町637番地第5長谷ビル2階
Email : info@symphotony.com TEL : 070-6582-2430

This component does not comply with the Federal Regulations (21 CFR Sub chapter 1) as administered by the Center for Devices and Radiological health. Purchaser acknowledges that his/her products must comply with these regulations before they can be sold to a customer. The output light from this product is harmful to a human body even if it is invisible. Avoid looking at the output of this product directly, or through a lens during operation. Observance of operation should be through a TV camera or related equipment. Refer to IEC 825-1 and 21 CFR 1040.10-1040.11 as a radiation safety standard for laser products.

RGBLase LLC follows a policy of continuous product improvement. Specifications are subject to change without notice.

RGBLase LLC 3984 Washington Blvd. #306 Fremont CA 94538 USA Phone 001 510 962 5884 Fax 001 866 650 8989
WWW.RGBLASE.COM EMAIL: rgblasec@rgblase.com